CL-528B-AB

Product Specification Sheet

HOUSING:	Die-cast solid brass. Easy turn & lock shroud with silicone “O” ring gasket.
FINISH:	Natural toning process, available in **AB**-Antique Bronze and also **BR**-Natural Brass. Antique Bronze finish will vary due to artistic natural process.
LENS:	Clear and heat resistant convex shape glass. See accessories & parts for special effect lenses and honeycomb louver.
LAMP TYPE:	12V, MR-16 halogen, 50W max. See lamp guide for LED and color MR-16 lamps.
MOUNTING:	Adjustable cast brass knuckle with 1/2” NPT, including ABS ground spike. Wire connector excluded. See accessories & parts for optional mounting hardware.
WIRING:	Fixture is prewired with a 3-foot pigtail of direct burial cable.

CL-528B-AB

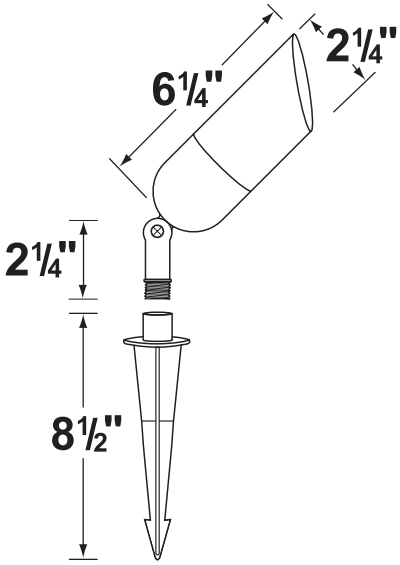

LED AVAILABLE

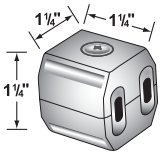

CX-839
CORONA UNIVERSAL CONNECTOR AVAILABLE

CORONA Lighting
WWW.CORONALIGHTING.COM

Tel: 800-727-9262
213-747-4500

Fax: 800-727-9957
213-747-3234

- Fixture is supplied with 20W MR-16 lamp.
- Remote 12 Volt transformer is required.
- See transformers and accessories for variety of options and choices.